HVP-12 750mA 12kV --nS

Glass Passivated High Voltage Rectifier Assembly

INTRODUCE:

HVGT high voltage silicon rectifier assembly is made of high quality glass passivated chip and high reliability epoxy resin sealing structure, and through professional testing equipment inspection qualified after to customers.

FEATURES:

1. High reliability design. GPP chips.
2. High voltage design.
3. Power frequency ratio
4. Conform to RoHS and SGS.
5. Epoxy resin molded in vacuumHave anticorrosion in the surface.

APPLICATIONS:

1. Ignition device power supply.
2. Microwave emission power.
3. General purpose high voltage rectifier.
4. Other.

MECHANICAL DATA:

1. Case: epoxy resin molding.
2. Terminal: external lead.
3. Net weight: 35 grams (approx).

SHAPE DISPLAY:

SIZE: (Unit:mm) **HVGT NAME: HVP**

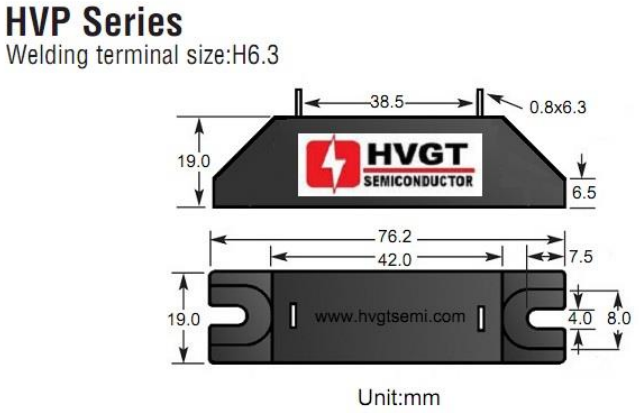

MAXIMUM RATINGS AND CHARACTERISTICS: (Absolute Maximum Ratings)

Items	Symbols	Condition	Data Value	Units
Repetitive Peak Renerse Voltage	V_{RRM}	T_A=25°C	12	kV
Non-Repetitive Peak Renerse Voltage	V_{RSM}	T_A=25°C	--	kV
Average Forward Current Maximum	I_{FAVM}	T_A=55°C	750	mA
		T_{OIL}=55°C	--	mA
Non-Repetitive Forward Surge Current	I_{FSM}	T_A=25°C; 50Hz Half-Sine Wave; 8.3mS	50	A
Junction Temperature	T_J		125	°C
Allowable Operation Case Temperature	Tc		-40~+125	°C
Storage Temperature	T_{STG}		-40~+125	°C

ELECTRICAL CHARACTERISTICS: T_A=25°C (Unless Otherwise Specified)

Items	Symbols	Condition	Data value	Units
Maximum Forward Voltage Drop	V_{FM}	at 25°C; at I_{FAVM}	10.8	V
Maximum Reverse Current	I_{R1}	at 25°C; at V_{RRM}	2.0	uA
	I_{R2}	at 100°C; at V_{RRM}	50	uA
Maximum Reverse Recovery Time	T_{RR}	at 25°C; I_F=0.5I_R; I_R=I_{FAVM}; I_{RR}=0.25I_R	--	nS
Junction Capacitance	C_J	at 25°C; V_R=0V; f=1MHz	--	pF

Forward Current Derating Curves

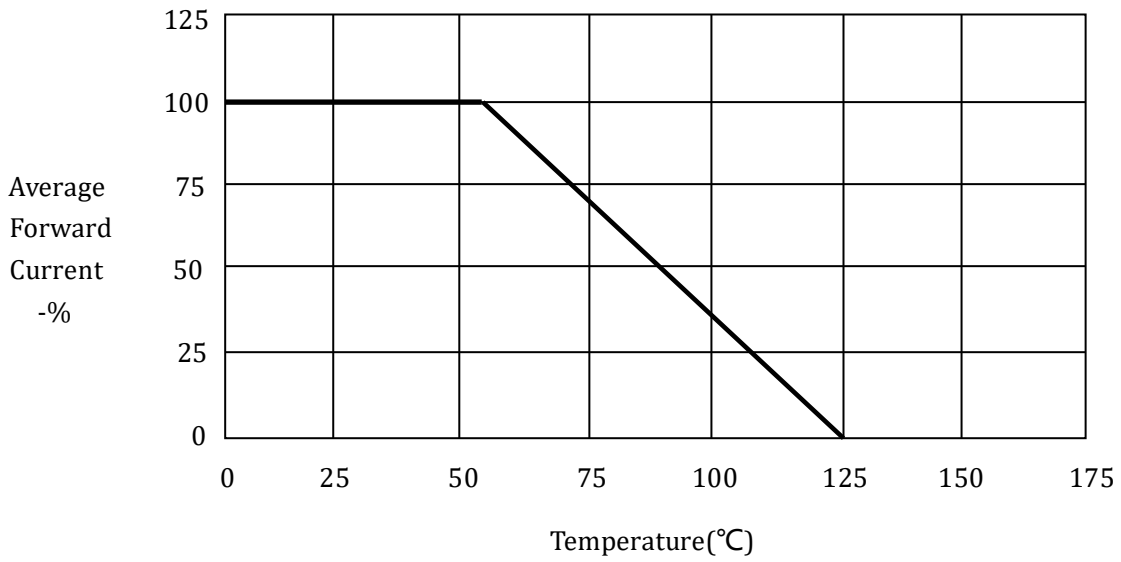

Non-Repetitive Surge Current

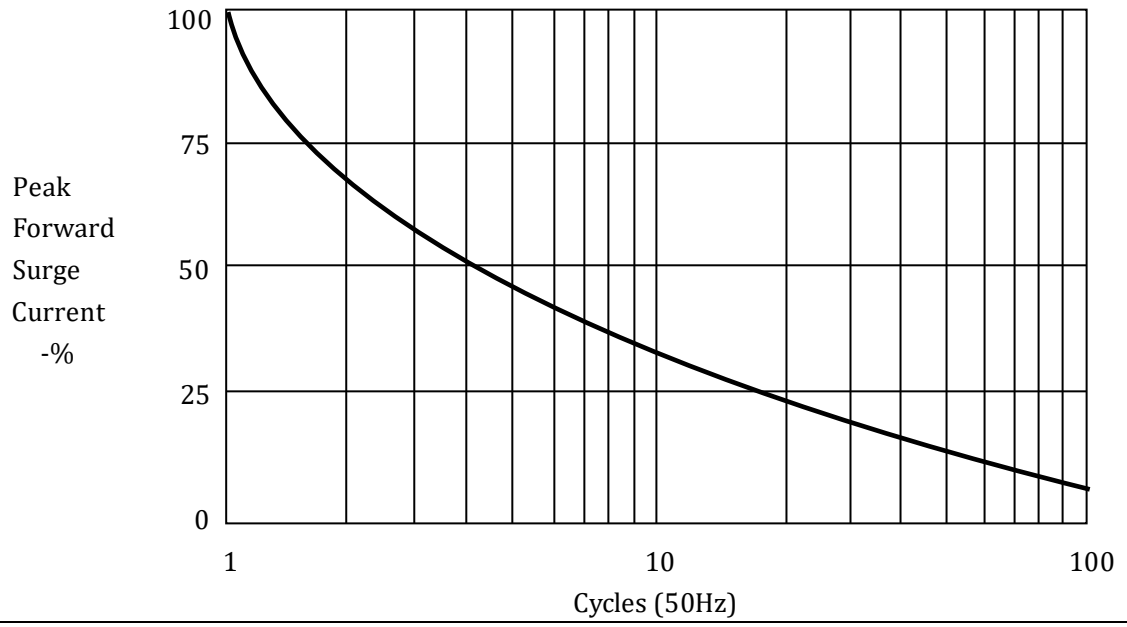

Marking:
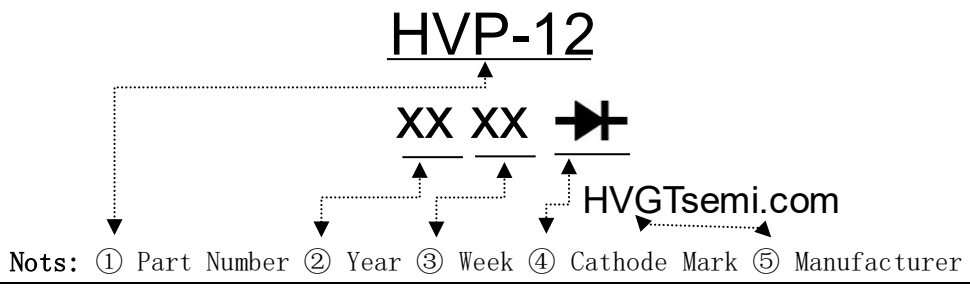
Part Number:	Marking And Nots:
HVP-12